T.Y. Diploma : Sem. VI
[ME/MH/MI]

# Design of Machine Elements

Time: 4 Hrs.] Prelim Question Paper Solution [Marks : 100

**Q.1(a) Attempt any THREE of the following** **[12]**

**Q.1(a) (i) Draw stress-strain diagram for ductile material stating salient points.** **[4]**

**Ans.:** [1 Mark for diagram, 3 Marks for description]

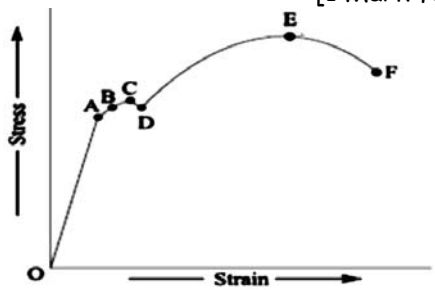


**Proportional limit (A):** The stress is proportional to strain. Beyond point *A*, the curve slightly deviates from the straight line. It is thus obvious, that Hooke's law holds good up to point A and it is known as **Proportional limit**.

**Elastic limit (B):** If the load is increase between point A and B, the body will regain its original shape when load is removed; it means body possesses elasticity up to point B, known as **Elastic Limit.**

**Upper yield point (C):** If the material is stressed beyond point *B*, the plastic stage will reach and the material will start yielding known as **Upper Yield Point.**

**Lower yield point (D):** Further addition of small load drops the stress-strain diagram to point D, as soon as the yielding start, this point 'D' is known as **Lower yield point.**

**Ultimate stress point (E):** After the end of yielding, if the load is increase beyond point 'D', there is increase in stresses up to point E and thus maximum value of stresses at point 'E' is called as **Ultimate Stress point.**

**Breaking Stress point (F):** After the specimen has reached the ultimate stress, a neck is formed, which decreases the cross-sectional area of the specimen. The stress corresponding to point *F* is known as **Breaking stress.**

**Q.1(a) (ii) Write the design procedure for turn buckle. (Any four steps)** **[4]**

**Ans.:** [4 marks for 4 equations]

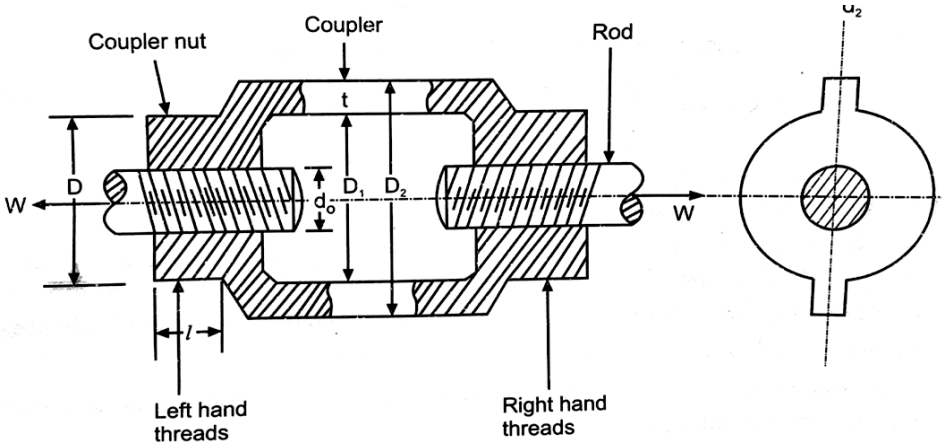

Where,

W = design load = 1.3 or 1.4 times load carried by rods

$\tau$ = permissible shear stress in N/mm$^2$

$\sigma_t$ = permissible tensile stress in N/mm$^2$

$\sigma_c$ = permissible crushing stress in N/mm$^2$

$d_c$ = core diameter of rod in mm,

$d_o$ = nominal diameter of rod in mm

p = pitch of the thread in mm, n = no threads,

l = length of coupler nut in mm

D = diameter of coupler nut,

$D_1$ = inside diameter of coupler

$D_2$ = outside diameter of coupler,

t = thickness of coupler

Step 1 : Design of rod (de)

Considering tensile failure,

$$6_t, = \frac{W}{\frac{\pi}{4} \times d_c^2}$$

After calculating dc, $d_0$ and pitch can be determine from std. table.

Step 2 : Design of coupler nut ($\ell$)

Consider shear failure,

$$\tau = \frac{W}{\pi d_c \ell}$$

Step 3 : Checking of crushing stress induced in thread ($6_c$)

$$6_c = \frac{W}{\frac{\pi}{4}[d_0^2 - d_c^2] \times n \times \ell}$$

Where, $n = \frac{1}{\text{Pitch}}$

Step 4 : Design of coupler nut (D)

Considering tensile failure,

$$6_t = \frac{W}{\frac{\pi}{4} \times [D^2 - d_0^2]}$$

Step 5 : Design of outer dia. Of coupler ($D_2$)

$$6_t = \frac{W}{\frac{\pi}{4}[D_2^2 - D_1^2]}$$

Where, $D_1$ = dot (6 to 8 mm)

t = 0.75 $d_0$

**Q.1(a) (iii) State any four factors to be considered while selecting the coupling. [4]**

**Ans.:** [1 mark each for any four factors]

Following factors should be consider while selecting coupling

(1) Cyclic operation
(2) Duration or life
(3) Misalignment of shafts
(4) Required torque and desired speed
(5) Direction of rotation
(6) Protection against overload
(7) Operating conditions

**Q.1(a) (iv) Why square threads are preferred over V-thread for power transmission? [4]**

**Ans.:** [1 mark each for any four factors]

(1) Square thread has the greatest efficiency as its profile angle is zero.
(2) It produces minimum bursting pressure on the nut.
(3) It has more transmission efficiency due to less friction.
(4) It transmits power without any side thrust in either direction.
(5) It is more smooth and noiseless operation.

**Q.1(b) Attempt any ONE of the following [6]**

**Q.1(b) (i) What is stress concentration? State the remedial measures to control the effect of stress concentration with neat sketches. [6]**

**Ans.:** [2m for stresses conc., 4 m for remedial measure]

**(i) Stress Concentration:** Whenever a machine component changes the shape of its cross-section, the simple stress distribution no longer holds good and the neighborhood of the discontinuity is different. This irregularity in the stress distribution caused by abrupt changes of form is called stress concentration. It occurs for all kinds of stresses in the presence of fillets, notches, holes, keyways, splines, surface roughness or scratches etc.

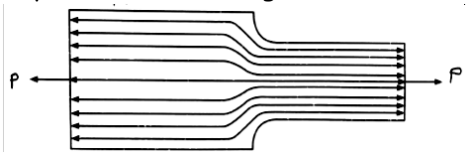


The presence of stresses concentration cannot be totally eliminated but it can be reduced, so following are the remedial measures to control the effects of stress concentration.

(1) Provide additional notches and holes in tension members as shown in fig (a)
   (a) Use of multiple notches.
   (b) Drilling additional holes as shown in fig(b)
(2) Fillet radius, undercutting and notch for member in bending.
(3) Reduction of stress concentration in threaded members as shown in fig(c)
(4) Provide taper cross-section to the sharp corner of member as shown in fig(d)

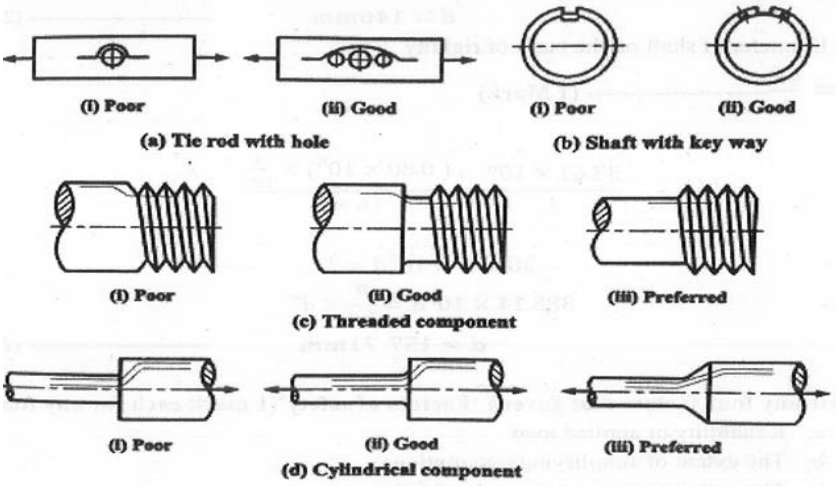


**Q.1(b) (ii) The shaft running at 125 r.p.m. transmits 440 kW. Find the diameter of shaft (d) if allowable shear stress in shaft material is 55 N/mm$^2$ and the angle of twist must not be more than 1° on a length of 16(d). The modulus of rigidity G = 0.80 × 10$^5$ N/mm$^2$. [6]**

**Ans.:** Given data:

N = 125 RPM

P = 440 kW = 440 × 10$^3$ Watt

$\tau$ = 55 N/mm$^2$

$\theta = 1° = \frac{\pi}{180}$ Rad

L = 16 d

$G = 0.80 \times 10^5$ N/mm$^2$

To Find: Diameter of Shaft

Solution:

(i) To find T

$$P = \frac{2\pi NT}{60}$$

$$440 \times 10^3 = \frac{2\pi \times 125 \times T}{60}$$

$T = 33.613 \times 10^3$ N.m

$T = 33.613 \times 10^6$ N. mm [1 mark]

(ii) Diameter of shaft on the basis of strength

$$T = \frac{\pi}{16} \times d^3 \times \tau$$

$$33.613 \times 10^6 = \frac{\pi}{16} \times d^3 \times 55$$

d = 146 mm [2 marks]

(iii) Diameter of shaft on the basis of rigidity

$$\frac{T}{J} = \frac{G\theta}{L}$$ [1 mark]

$$\frac{33.61 \times 10^6}{J} = \frac{(0.80 \times 10^5) \times \frac{\pi}{180}}{16 \times d}$$

$385.14 \times 10^3 d = J$

d = 157.71 mm [2 mark]

**Q.2 Attempt any TWO of the following [16]**

**Q.2(a) Explain with the help of neat sketches three basic types of lever. State one application of each type. [8]**

**Ans.:** In the first type of levers, the fulcrum is in between the load and effort. In this case, the effort arm is greater than load arm, therefore M.A. obtained is more than 1 [1 mark]

**Application:** Bell crank levers used in railway signaling arrangement, rocker arm in I.C. Engines, handle of a hand pump, hand wheel of a punching press, beam of a balance, foot lever (any 1) [1 mark]

In the second type of levers, the load is in between the fulcrum and effort. In this case, the effort arm is more than the load arm, therefore M.A. is more than 1. [1 mark]

**Application:** levers of loaded safety valves, wheel barrow, nut cracker (any1) [1 mark]

In the third type of levers, the effort is in between the fulcrum and load. Since the effort arm, in this case, is less than the load arm, therefore M.A. is less than 1 [1 mark]

**Application:** a pair of tongs, the treadle of sewing machine (any 1) [1 mark]

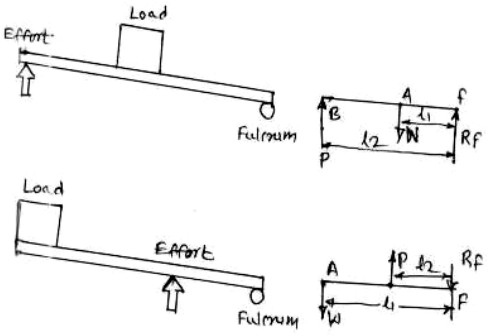

**Q.2(b) Explain with the help of neat sketches, the design procedure of a square sunk key. [8]**

**Ans.:**

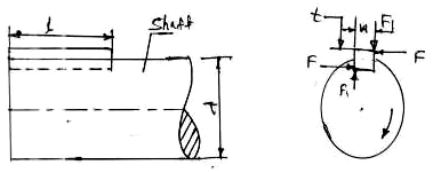


[2 marks]

T = Torque transmitted by the shaft,
F = tangential force acting at the circumference of the shaft,
d = dia. Of shaft,
l = length of key, [2 marks]
w = width of key
t = thickness of key
$\tau$ and $\sigma_c$ = shear and crushing stress for the material of key
Consider shearing of key, the tangential shearing force acting at the circumference of the shaft,
F = Area resisting shearing X shear stress = $l \times w \times \tau$ [1 mark]
Torque transmitted by the shaft, $T = F \times d/2 = l \times w \times \tau \times d/2$
Consider crushing of key, the tangential crushing force acting at the circumference of the shaft,
F = Area resisting crushing $\times$ crushing stress = $l \times t/2 \times \sigma_c$ [1 mark]
Torque transmitted by the shaft, $T = F \times d/2 = l \times t/2 \times \sigma_c \times d/2$
The key is equally strong in shearing and crushing, if
$L \times w \times \tau \times d/2 = l \times t/2 \times \sigma c \times d/2$
$w/t = \sigma_c/2\tau$
as, w = t
therefore $\sigma_c = 2\tau$ [2 marks]

**Q.2(c) (i) State applications of maximum shear stress theory and principal normal stress theory. [8]**
**(ii) State two applications each of cotter joint and knuckle joint.**

**Ans.:** (i) (a) Applications of maximum shear stress theory: for ductile material, crank shaft, propeller shafts, c frames [2 marks]
(b) Applications of maximum principle normal stress theory: for brittle material, machine spindle, machine beds, c frames, overhang crank [2 marks]
(ii) (a) Applications of cotter joint: cotter foundation bolt, big end of the connecting rod of a steam engine, joining piston rod with cross head, joining two rods with a pipe [2 marks]
(b) Applications of knuckle joint: link of bicycle chain, tie bar of roof truss, link of suspension bridge, valve mechanism, fulcrum of lever, joint for rail shifting mechanism [2 marks]

**Q.3 Attempt any FOUR of the following [16]**

**Q.3(a) State the composition of the materials 30Ni16 Cr5, 40C8, FeE230 X15Cr25Ni 12. [4]**

**Ans.:** 30 Ni 16 Cr5 : alloy steel
carbon 0.3% of average, Nickel 16%, chromium 5% [1 mark]
40C8 : Plain carbon steel
carbon 0.4% of average, manganese 0.8% [1 mark]
FeE230 : Steel with yield strength of 230N/mm$^2$ [1 mark]
X15Cr25Ni12 : high alloy steel
carbon 0.15% of average, chromium 25%, Nickel 12%,

**Q.3(b) Design single cotter joint to transmit 200 kN. Allowable stresses for the material are 75 MPa in tension and 50 MPa in shear. [4]**

**Ans.:** Given : Load 200 KN = 200000N
$\sigma_t$ = 75 MPa, $\tau$ = 50 MPa
(i) **Dia of rod** $P = \pi/4 \times d^2 \times \sigma t$
$200000 = 0.7854 \times d^2 \times 75$

d = 58.27mm say 60 mm [1 mark]

failure of spigot in tension across the slot

$p = \pi/4\ (d_2)^2 - d_2 x t$

$200000 = 0.7854 \times d_2 \times d_2 - d_2 \times d_2/4$, $t = d_2/4 = 60/4 = 15$

$D_2^2 = 200000/(0.7854 - 0.25) \times 75$

$D_2 = 70.58$mm [1 mark]

**Failure of spigot end in shear**, $P = 2 \times a \times d2 \times 6s$

$200000 = 2 \times a \times 70.58 \times 50$

A = 28.33mm

**Failure of spigot collar in shear** $P = \pi\ d_2 \times t_1 \times \tau$

$200000 = 3.142 \times 70.58 \times t_1 \times 50$

$t_1 = 18.03$mm

**Failure of socket in tension across the slot**, $P = \pi/4(d^2 1 - d^2 2) - (d_1 - d_2) \times t \times \sigma_t$ [1 mark]

$d_1 \times d_1 - 19.09 d_1 - 7028.85 = 0$

solving by quadratic eq. method

$d_1 = -(19.09) + -(-19{,}09 \times 19.09 - 4 \times 1 \times 7028.85)1/2/2$

$d_1 = 84.925$mm

**Failure of cotter in shearing** $P = 2 \times b \times t \times \tau$ [1 mark]

$200000 = 2 \times b \times 15 \times 50$

b = 133.33mm

**Q.3(c) State the 'Lewis equation' for spur gear design. State SI unit of each term in the equation. [4]**

**Ans.:** Lewis equation: $W_T = \sigma_w.b.\pi.m.y$,

$W_T$ = Tangential load acting at the tooth in N [2 marks]

$\sigma_w$ = bending stress in $N/mm^2$

b = width of the gear face in mm [2 marks]

m = module in mm

y = lewis form factor.

**Q.3(d) Explain why bolts of uniform strength are preferred. Draw sketches of two different types of bolts of uniform strength. [4]**

**Ans.:** **Bolts of uniform strength:** if a shank dia.is reduced to a core dia.as shown in fig. the stress become same throughout the length of the bolt. Hence impact energy is distributed uniformly throughout the bolt length, thus relieving the threaded portion of high stress. The bolt in this way becomes stronger and lighter. This type of bolt is known as bolt of uniform strength. Another method of obtaining the bolt of uniform strength is shown in fig.in this method, instead of reducing the shank dia.an axial hole is drilled through the head down to the threaded portion such that the cross sectional area of the shank becomes equal to the area of the threaded portion. If bolts of uniform strength are not used a large portion of impact energy will be absorbed in the threaded portion and relatively a small portion of energy is absorbed by a shank. This uneven distribution of impact energy may lead to the fracture of the bolt in threaded portion .hence bolts of uniform strength are preferred. [2 marks]

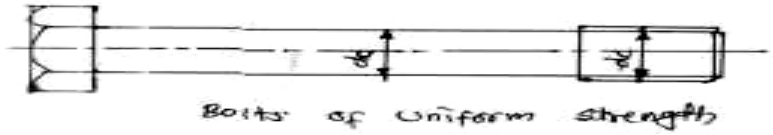

Bolts of Uniform strength

Bolts of Uniform strength

[2 marks]

**Q.3(e) Prove that for a square key $\sigma_c = 2\tau$ where $\sigma_c$ = crushing stress, $\tau$ = shear stress. [4]**

**Ans.:** F = tangential force acting at the circumference of the shaft,
d = dia. Of shaft,
l = length of key,
w = width of key
t = thickness of key [4 marks]
$\tau$ and $\sigma_c$ = shear and crushing stress for the material of key
Consider shearing of key, the tangential shearing force acting at the circumference of the shaft,
F = Area resisting shearing X shear stress = l x w x 6s
Torque transmitted by the shaft, T = F X d/2 = lxw x 6s x d/2
Consider crushing of key, the tangential crushing force acting at the circumference of the shaft,
F = Area resisting crushing x crushing stress = l x t/2 x 6c
Torque transmitted by the shaft, T = F X d/2 = l x t/2 x 6c X d/2
The key is equally strong in shearing and crushing ,if
lxw x 6s x d/2= lxt/2 x $\sigma_c$X d/2
w/t =6c/2 $\tau$
$\sigma_c$=2$\tau$

**Q.4(a) Attempt any THREE of the following. [12]**

**Q.4(a) (i) State four examples of ergonomic considerations in the design of a lathe machine. [4]**

**Ans.:** [Any 4 advantages, 4 marks]

Ergonomics consideration in the design of Lathe machine
(1) The controls on lathe should be easily accessible and properly positioned.
(2) The control operation should involve minimum motions.
(3) Height of lathe should be match with worker for operation
(4) Lathe machine should make less noise during operation.
(5) Force& power capacity required in turning the wheel as per operation or human being can apply normally.
(6) Should get required accuracy in operation.

**Q.4(a) (ii) Write the equation with Wahl's factor, used for design of helical coil spring. State the SI unit of each term in the equation. [4]**

**Ans.:** Wahl's Factor Equation:

$$K = \frac{4C-1}{4C-4} + \frac{0.615}{C}$$ [2 marks]

S.I. Unit of Each Term:
C : Spring Index Unit : It is constant unit less term. [2 marks]

**Q.4(a) (iii) State four important modes of gear failure. [4]**

**Ans.:** [Any 4 modes, 4 marks]

**Modes of Gear Failure:**

1. **Bending failure.** Every gear tooth acts as a cantilever. If the total repetitive dynamic load acting on the gear tooth is greater than the beam strength of the gear tooth, then the gear tooth will fail in bending,
2. **Pitting.** It is the surface fatigue failure which occurs due to many repetition of Hertz contact stresses.
3. **Scoring.** The excessive heat is generated when there is an excessive surface pressure, high speed or supply of lubricant fails.
4. **Abrasive wear.** The foreign particles in the lubricants such as dirt, dust or burr enter between the tooth and damage the form of tooth.
5. **Corrosive wear.** The corrosion of the tooth surfaces is mainly caused due to the presence of corrosive elements such as additives present in the lubricating oils.

**Q.4(a) (iv) State four disadvantages of screwed joints.** **[4]**

**Ans.:** [Four Disadvantages : 4 Marks]

**Four Disadvantages of screwed joints:**

(1) Screwed joints are weaker than welded joint
(2) Screwed joints weaken (due to holes) the parts that are to be joined.
(3) Stress concentration in the threaded portion of screw makes them weak.
(4) Locking arrangement is required in case of vibrations

**Q.4 (b) Attempt any ONE of the following** **[6]**

**Q.4(b) (i) Explain the design procedure of shaft on the basis of torsional rigidity. State the equation with SI units. State two applications of this approach.** **[6]**

**Ans.: Design procedure of Shaft on the Basis of torsional rigidity.**

**Torsional rigidity.** The torsional rigidity is important in the case of camshaft of an I.C.engine where the timing of the valves would be affected. The permissible amount of twist should not exceed 0.25° per metre length of such shafts. For line shafts or transmission shafts, deflections 2.5 to 3 degree per metre length may be used as limiting value. The widely used deflection for the shafts is limited to 1 degree in a length equal to twenty times the diameter of the shaft.

The torsional deflection may be obtained by using the **torsion equation**,

Diameter of shaft on the basis of rigidity

$$\frac{T}{J} = \frac{G\theta}{L}$$ [2 marks]

Where, $\theta$ = Torsional deflection or angle of twist in radians,

T = Twisting moment or torque on the shaft, N.mm

J = Polar moment of inertia of the cross-sectional area about the axis of rotations, [2 marks]

L = Length of shaft in mm

G = Modulus of rigidity in N/mm$^2$

$J = \frac{\pi}{32} \times d^4$ …for solid shaft

$J = \frac{\pi}{32} \times (do^4 - di^4)$ …for Hollow shaft

Two Applications: [2 marks]

Propeller shaft of automobile, marine engine shaft and Shaft of pump and motor.

**Q.4 (b)(ii) Draw S-N curve. Explain the concept of endurance limit and its need in design of machine elements.** **[6]**

**Ans.: S-N Curve:**

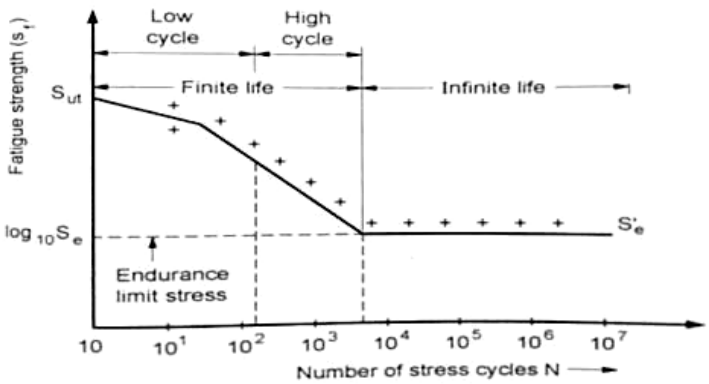


[2 marks]

**Endurance Limit:** It is defined as maximum value of the completely reversed bending stress which a polished standard specimen can withstand without failure, for infinite number of cycles (usually 107 cycles).It is known as **endurance** or **fatigue limit** ($\sigma e$). [2 marks]

Need of Endurance Limit in Machine Design:

Endurance limit is used to describe a property of materials: the amplitude (or range) of cyclic stress that can be applied to the material without causing **fatigue** failure. [2 marks]

**Q.5 Attempt any TWO of the following [16]**

**Q.5(a) (i) Show that the efficiency of a self locking screw is less than 50%. [4]**

**(ii) What is self locking property of threads and where it is necessary?**

**Ans.:** (i) efficiency of screw $\eta = \tan\alpha / \tan(\alpha + \phi)$

And for self locking screws, $\phi \geq \alpha$ or $\alpha \leq \phi$ [4 marks]

Efficiency $\leq \tan(\phi + \phi)$

$\leq \tan\phi/\tan 2\phi$

$\leq \text{tap}\ \phi/(2\tan\phi/(1-\tan^2\phi))$

$\leq \tan\phi \times (1 - \tan^2\phi) / (2\tan\phi)$

$\leq \frac{1}{2} - \tan^2\phi/2$

From this expression efficiency of self locking screw is less than 50%.

(ii) Self locking property of the threads if $\phi > \alpha$ the torque required to lower the load will be positive, indicating that an effort is applied to lower the load. If friction angle is greater than the helix angle or coefficient of friction is greater than the tangent of helix angle. [3 marks]

Applications: for very large use of screw in threaded fastener, screws in screw top container lids, vices, C-clamps and screw jacks. [1 mark]

**Q.5(b) (i) The extension springs are in considerably less use than compression springs. Why? [4]**

**(ii) Explain the terms self locking and overhauling of screw.**

**Ans.:** (i) It is easier to overextend the extension spring. Compression springs will bottom out before the overextend. Also it seems like the tensile strength will be weaker at the attachment point for the extension spring, making it generally larger and more cumbersome to correct the deficiency

(ii) **Self locking property -** Torque required to lower the load, $T = W\tan(\phi - \alpha)xd/2$

**self locking property** of the threads-if $\phi > \alpha$ the torque required to lower the load will be positive, indicating that an effort is applied to lower the load. If friction angle is greater than the helix angle or coefficient of friction is greater than the tangent of helix angle [2marks]

**Over hauling of screws-**

In the above expression, if $\phi < \alpha$, then the torque required to lower the load will be negative. The load will start moving downward without the application of any torque, such a condition is known as over hauling of screws. [2marks]

**Q.5(c) (i) Define following terms as applied to rolling contact bearings: [4]**

**(1) Basic static load rating**

**(2) Basic dynamic load rating**

**(3) Limiting speed**

**(ii) List important physical characteristics of good bearing material.**

**Ans.: (i) Definition of**

**(1) Basic static load rating:** Static radial load or axial load which corresponds to a total permanent deformation of the ball and race, at the most heavily stressed contact, equal to 0.001times the ball diameter.

**(2) Basic dynamic load rating:** the constant stationary radial load or a constant axial load which a group of apparently bearings with stationary outer ring can endure for a rating life of one million revolutions with only 10% failure. [4 mark]

**(3) Limiting speed:** it is the empirically obtained value for the maximum speed at bearings can be continuously operated without failing from seizure or generation of excessive heat.

**(ii) Physical characteristics of good bearing material:** compressive strength, fatigue strength, embed ability, bendability, corrosion resistant, thermal conductivity, thermal expansion, conformability. [Any four, 1 mark each]

**Q.6 Attempt any FOUR for the following. [16]**

**Q.6(a) Draw profiles to square and Acme threads with full details. Which one is stronger? [4]**

**Ans.:** Acme thread is stronger [1 mark]

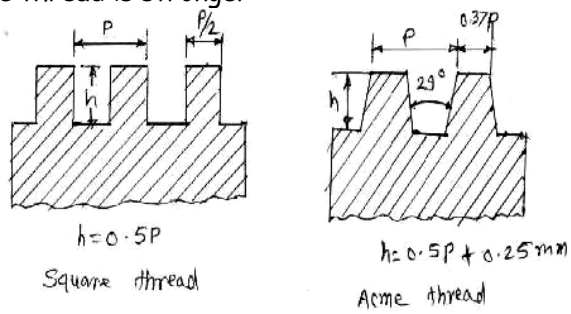


[3marks for labelled diagram]

**Q.6(b) A helical valve spring is to be designed for an operating load range of approximately 135 N. The deflection of the spring for the load range is 7.5 mm. Assume spring index of 10. Permissible shear stress for the material of the spring = 480 MPa and its modulus of rigidity = 80 KN/mm$^2$. Design the spring. [4]**

**Take Wahle's factor = $\frac{4C-1}{4C-4}+\frac{0.615}{C}$, 'C' being the spring index.**

**Ans.:** Given, load W = 135 N

Deflection $\delta$ = 7.5 mm

Spring index $C$ = 10 [1 mark each]

Permissible shear stress T = 480 MPa

Modulus of rigidity $G$ = 80 KN/mm$^2$

Wahl's factor K = $4C - 1/4C - 4 + 0.615/C = 4 \times 10 - 1/4 \times 10 - 4 + 0.615/10 = 1.14$

(1) Mean dia. of the spring coil [1 mark]

Maximum shear stress, $T = K \times 8\ WC/\pi d^2$

$480 = 1.14 \times 8 \times 135 \times 10 / 3.142 \times d^2$

D = 2.857 mm

From table we shall take a standard wire of size SWG 3 having diameters (d) = 2.946 mm

mean dia. of the spring coil $D = C \times d = 10 \times 2.946 = 29.46$ mm

outer dia. of the spring coil Do = D + d = 29.46 + 2.946 = 32.406 mm

(2) number of turns of the spring coil (n) [1 mark]

Deflection$^{\delta}$ = $8WC^3n/Gd$

$7.5 = 8 \times 135 \times 10^{3*}\ n/\ 80000 \times d$

n = 1.64 say 2

for square and ground end n′ = n + 2 + 2 = 4

(3) free length of spring [1 mark]

$= Lf = n'd + \delta + 0.15 \times \delta = 4 \times 2.496 + 7.5 + 0.15 \times 7.5 = 18.609$ mm

(4) Pitch of the coil [1 mark]

p = free length/n′ = 1 = 18.609/4 – 1 = 6.203 mm

**Q.6(c) A bracket as shown in Figure is fixed to a vertical steel column by means of five standard bolts. [4]**

**Determine :**

**(i) The diameter of the fixing bolts.**

**(ii) The thickness of the arms of the bracket.**

**Assume safe working stress of 70 MPa in tension and 50 MPa in shear**

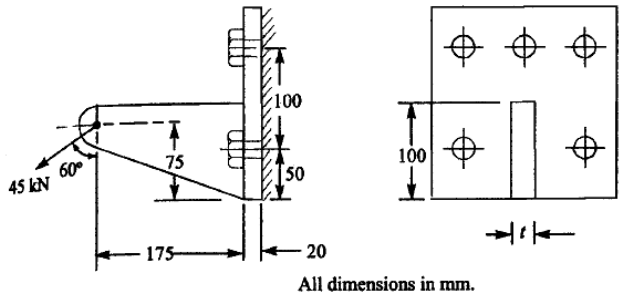


**Fig.**

**Ans.:** Horizontal component of 45 KN,

$W_H = 45 \sin 60° = 45 \times 0.866 = 38971$ N and vertical component of 45 KN,

$W_v, = 45 \times \cos 60° = 45 \times 0.5 = 22500$ N

Vertical component of 45 KN, $W_V = 45 \times \cos 60° = 45 \times 0.5 = 22500$ N

Direct tensile load in each bolt, $W_{t1} = W_H/5 = 38971/5 = 7794.20$N

Turning moment due to $W_H$ about G.

$T_H = W_{Hx}\ 25 = 38971 \times 25 = 97425$ N (anticlockwise)

direct shear load on each bolt = Ws = Wv/5 = 22500/5 = 4500 N

Turning moment due to Wv about edge of the bracket,

$Tv = W_v \times 175 = 22500 \times 175 = 3937500$N–mm (clockwise(clockwise))

Net turning moment = 3937500 – 974275 = 2963225 N ...(I)

Total moment of the load on the bolts @ th tilting edge

$= 2w \times (L_1)^2 + 2w \times (L_2)^2 = 2 \times w \times (50)^2 + 2 \times w \times (150)^2 = 50000$ w N–mm ...(ii)

from equation (I) and (II)

2963225N = 50000 w N–

w = 592.645 N

max. tensile load on each of the upper bolt,

$Wt_2 = wL_2 = 592.645 \times 150 = 88896.75$ N

tensile load on each of the upper bolt,

$Wt = W_{t1} + W_{t2} = 7794.20 + 88896.75 = 96690.95$N

Equivalent tensile load = $Wte = \frac{1}{2}\ (Wt + \sqrt{(Wt)^2 + 4(Ws)^2}$

= 1/2 (96690.95 + 97108.91) = 96899.93 N

Tensile load on each bolt = $\pi/4(dc)^2 \times 6t = 0.7854 \times (dc)^2 \times 70$

dc = 41.98 mm

From coarse series the standard core dia. is 49.0177 mm and corresponding size of the bolt is M56.

[2 marks]

Thickness of the arm of the bracket

Cross sectional area of the arm A = bXt = 100 × t

Section modulus of the arm, $Z = 1/6\ t\ (b)^2 = 1/6 \times tx\ (100)^2 = 1666.67$ xt

Direct tensile stress $6t_1 = W_H/A = 38971/100t = 389.71/t$

Bending stress $6t_2 = M_H/Z = 208/t$

Bending stress $6t_3 = M_V/Z = 2632.49/t$ [2 marks]

Net tensile stress, $6t + 6t_2 + 6t_3 = 3230.20/t$

max. tensile stress, 6t max. $6t/2 + 1/2\ \sqrt{(6t)^2 + 4(T)^2} = 70$

t = 46.36 mm

**Q.6(d) What are rolling contact bearings? State their advantages over sliding contact bearings.** **[4]**

**Ans.:** Rolling contact bearing- contact between the surfaces is rolling, it is antifriction bearing

**Advantages (any six)** [1 mark]

(1) low starting and running friction except at very high speed

(2) ability to withstand momentary shock loads

(3) accuracy of shaft alignment (4) low cost of maintenance

(5) reliability of service (6) easy to mount and erect

(7) cleanliness (8) small overall dimension [$\frac{1}{2}$ mark each]

**Q.6(e) State the strength equation of double parallel fillet weld and single transverse fillet weld with neat sketches.** **[4]**

**Ans.:** Strength Equation of double parallel fillet weld = throat area × allowable shear stress

$P = 2 \times 0.707 \times S_w \times l_w \times T = 1.414 \times S_w \times l_w \times T$

Strength equation of single transverse fillet weld

P = throat area x allowable tensile stress $P = 0.707 \times S_w \times l_w \times \sigma_t$

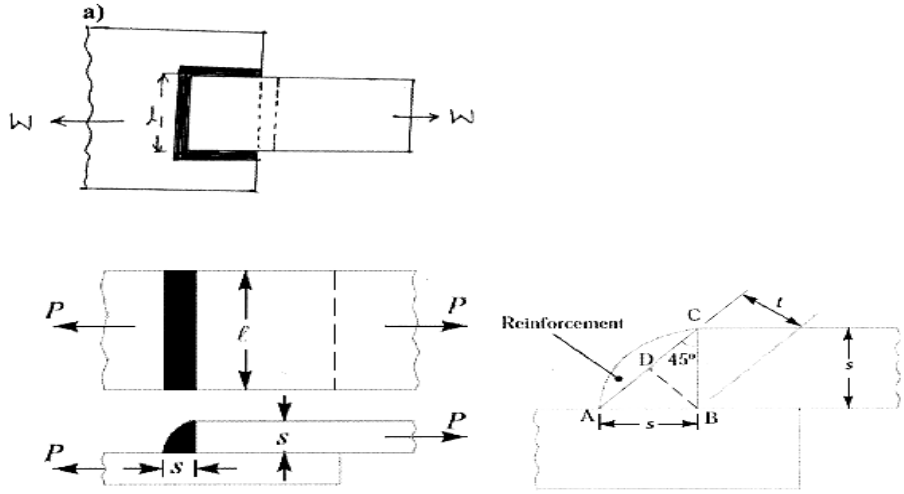


[1 mark]

Let /= Throat thickness (BD),

s = Leg or size of weld,

= Thickness of plate, and

/= Length of weld,

From figure from above we find that the throat thickness,

$t = s \times \sin 45° = 0.707\ s$

∴ *Minimum area of the weld or throat area,

A = Throat thickness × Length of weld = t × /= 0.707 s × / [1 mark]

If σt is the allowable tensilc stress for the weld metal, then the tensile strength of the joint of single fillet weld.

P = Throat arca × Allowable tensilc stress = 0.707 s × /× σt [½ mark]

and tensile strength of the joint for double fillet weld.

P = 2 × 0.707 s × /× σt = 1.414 s × /× σt [½ mark]

If τ is the allowable shear stress for the weld metal, then the shear shear strength of the joint for single parallel fillet weld.

P = Throat area × Allowable shear stress = 0.707 s × /× τ

and shear strength of the joint for double parallel fillet weld.

P = 2 × 0.707 × s × /× τ = 1.414 s × /× τ [½ mark]

The strength of the joint is given by the sum of strengths of single transverse and double parallel fillet welds. Mathematically,

P = 0.707s × /1 × σt + 1.414 s × /2 × τ [½ mark]

❑ ❑ ❑ ❑ ❑