T.Y. Diploma : Sem. VI

[EJ/ET/EN/EX]

Advanced Communication System

Time: 3 Hrs.] Prelim Question Paper **[Marks : 100**

Instructions : (1) All questions are compulsory.
(2) Answer each next main question on a new page.
(3) Illustrate your answers with neat sketches wherever necessary.
(4) Figures to the right indicate full marks.
(5) Assume suitable data, if necessary.
(6) Mobile Phone, Pager and any other Electronic Communication devices are not permissible in Examination Hall.

1. (a) Attempt any **THREE** questions. **[12]**
(i) Give the working principle of PIN diode with construction.
(ii) Define the terms w.r.t. waveguide :
(1) Cut-off frequency (2) Cut-off wavelength
(iii) Draw block diagram of Radar System and explain it.
(iv) Define following terms w.r.t. satellite :
(1) Azimuth angle (2) Elevation angle

1. (b) Attempt any **ONE** questions. **[6]**
(i) Justify TE_{110} mode in rectangular waveguide is the dominant mode. Draw the field pattern for TE_{110} and TE_{210} mode.
(ii) Differentiate between TE m, n and TM m, n modes. (6 points)

2. Attempt any **FOUR** questions. **[16]**
(a) Describe, how bunching is formed in Magnetron-with neat diagram.
(b) A rectangular waveguide measures 3×4.5 cm internally and has a 9 GHz signal propagated in it. Calculate the cut off wave length, the guide wavelength, phase velocity and the characteristic wave impedance for TE_{110} mode.
(c) Write the operation of pulsed radar to detect the object.
(d) Differentiate between waveguide and two wire transmission line.
(e) List the specifications of two cavity klystron amplifier and give it s applications.
(f) Define :(i) Reflection
(ii) Refraction
(iii) Absorption in scattering w.r.t light theory.

3. Attempt any **FOUR** questions. **[16]**
(a) When the mean optical power launched into an 8km length of fiber is 120 μW, the mean optical power at the fiber output is 120 μW. Determine the overall signal attenuation or loss in decibels through the fiber, assuming there are no connector or splices.
(b) State the advantages and applications of circular waveguide (2 points each).
(c) Explain advantages of satellite communication (4 points).
(d) Compare Non synchronous and synchronous satellite based on :
(i) Orbit (ii) Visibility (iii) Altitude (iv) Footprint
(e) Explain A–scope Display Method with diagram, used in Radar System.

4. (a) Attempt any **THREE** questions. **[12]**
(i) Draw the frequency spectrum for communication and show the region for Fiber optic communication.
(ii) Draw the construction of Tunnel diode and give its working as microwave component.
(iii) Illustrate how telemetry tracking and command system used in satellite communication.
(iv) Sketch the construction of circulator and isolators. State two applications of each.
(v) State the two applications of each:
(1) IMPATT diode (2) PIN diode

(b) Attempt any **ONE** questions. **[6]**

(i) Explain the term Station keeping with reference to satellite communication.

(ii) Identify the given diagram, label the block A, B and C and illustrate why those blocks are needed.

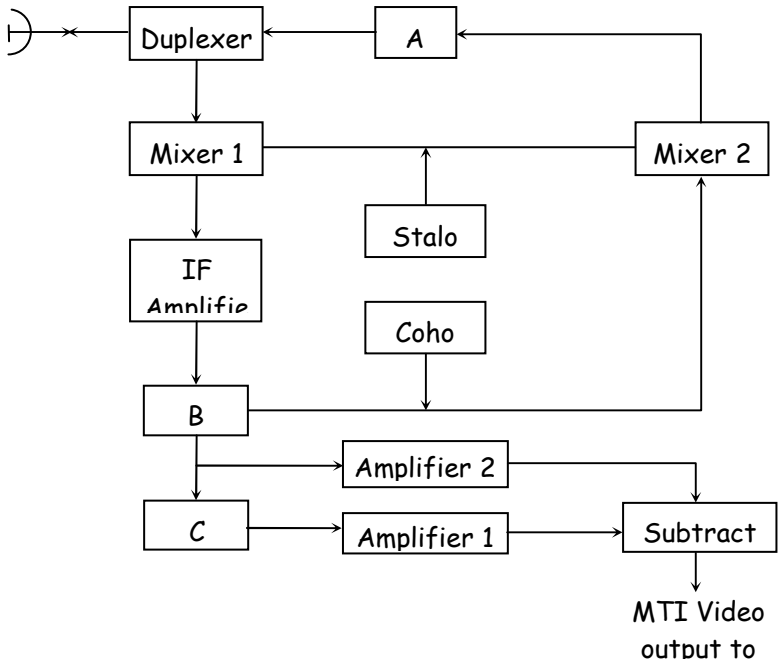

5. Attempt any **FOUR** questions. **[16]**

(a) Draw the constructional diagram of Isolator and illustrate its operation.

(b) Calculate critical angle of incidence between two material with different refractive indices $n_1 = 1.4$ and $n_2 = 1.36$. Also calculate numerical aperture and acceptance cone angle.

(c) Draw TWT and give its two applications.

(d) Differentiate between single mode and multimode fiber.

(e) Compare between edge emitter and surface emitter LED's.

(f) List and explain the properties of splicing.

6. Attempt any **FOUR** questions. **[16]**

(a) Describe absorption and scattering with the help of light theory.

(b) How power is generated in satellite? Describe how it is distributed to other subsystem of satellite.

(c) Describe function of hybrid Tee with neat diagram. (E-H plane or Magic Tee).

(d) Describe the function of following junctions :

(i) E- plane junction

(ii) H- plane junction in microwave transmission

(e) Differentiate between fusion splice and V-groove splice.

❑ ❑ ❑ ❑ ❑

Paper Discussion Schedule for: T.Y. Diploma Sem. VI

Date	Day	Timing	Centre
21 April 2019	Sunday	9 a.m. to 11 a.m.	Dadar