T.Y. Diploma : Sem. VI
[EJ/ET/EX/EN/IE/IU]
Mechatronics
Prelim Question Paper Solution

Time: 3 Hrs.] **[Marks : 100**

Q.1(a) Attempt any THREE of the following: [12]

Q.1(a) (i) Explain the significance of mechatronics. Also state any three applications of mechatronics system. [4]

(A) Significance of Mechatronics [1 mark]

Mechatronics is a rapidly developing interdisciplinary field of engineering and is an integration of mechanical engineering, electronics engineering, computer technology, information technology, control system engineering and instrumentation engineering.

Three applications of mechatronics system : [1 mark each]

(a) Bio-medical applications like enjography, enjoplasty, myography 4D- echo, brain operations, sonography, MRI, C.T. Scan etc.

(b) Automatic Household equipments like washing machines, bread toaster, camera, geyser, cooking system, embroidery and sewing machines etc.

(c) Process controls used in steel plants, mines, bottling, cement manufacturing, biscuit and confectionary manufacturing, refineries, oil industries, glass industries, electricity distribution and fault clearing, boilers, printing etc.

Q.1(a) (ii) Define the terms : [4]

(a) Hard real time mechatronics system and

(b) Soft real time mechatronics system

(A) (a) Hard real time mechatronics system [2 marks]

In this system, completion of an operation after its deadline is not useful. The operation must be completed on or before the specified time.

Example – Car engine control system.

(b) Soft real time mechatronics system [2 marks]

It tolerates delay in completion of operation. This causes response with decreased service quality.

Example – Operation of a pressure cooker.

Q.1(a) (iii) Draw a neat and labelled block diagram of a mechatronic system. [4]

(A) Block diagram [4 marks]

Figure below represents the block diagram for a closed-loop mechatronics system.

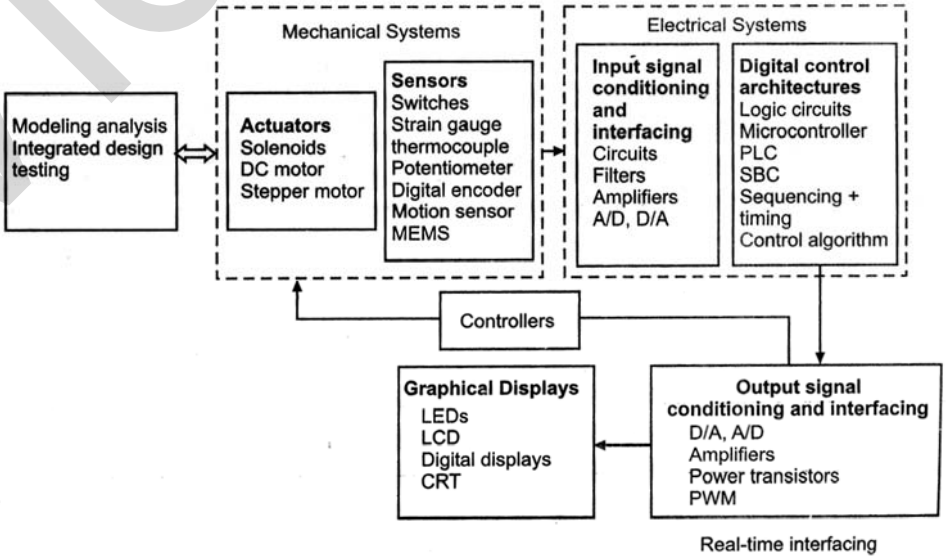

Q.1(a) (iv) Define a transducer. Draw the basic block diagram of a transducer. [4]

(A) Transducer [2 marks]

It is defined as a device which converts energy in one form to the energy in another form.

Figure below represents the basic block diagram of a transducer. [2 marks]

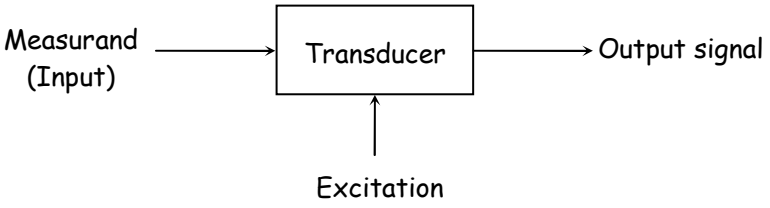

Q.1(b) Attempt any TWO of the following: [8]

Q.1(b) (i) Explain the Hall effect with a neat and labelled figure. Also explain briefly its use for measuring displacement. [4]

(A) Principle [1 mark]

If a strip of conducting or semiconductor material carries an electric current in the presence of a transverse magnetic field as shown in the following fig. 1, an e.m.f. E_H is induced across the opposite faces of the strip. Its magnitude depends upon the current, the magnetic field strength, the thickness of the strip and the Hall effect coefficient of the strip-material.

This is known as the Hall effect.

Further,

$$E_H = \frac{K_H IB}{t}$$

where E_H = Hall effect coefficient,
I = current through the strip,
B = flux density,
t = thickness of the strip.

The voltage induced may be used for measurement of the current I or magnetic field density B.

The materials of the strip can be As, Cu, Fe, C, Bi, Si, Sn n-Ge or Te etc.
E_H is very small in conductors but large in semiconductors.

Diagram

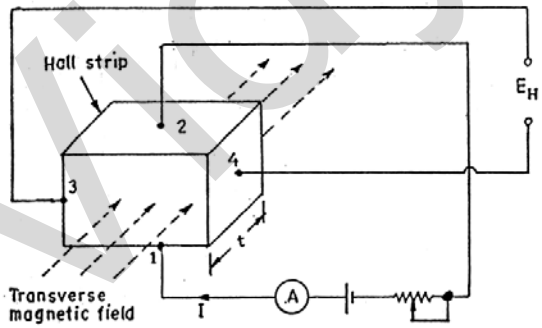

Fig.1

[1 mark]

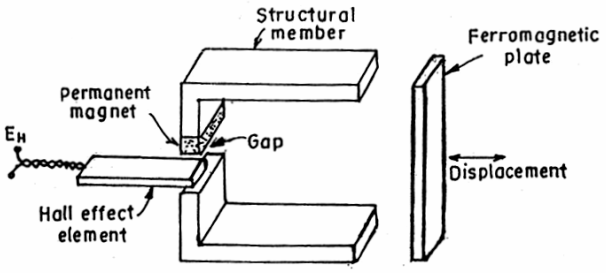

Fig. 2

[1 mark]

Use : [1 mark]

Measurement of displacement : (proximity)

The Hall effect element is located in the gap, adjacent to the permanent magnet. The field strength B due to this permanent magnet is varied by changing the position of the ferro-magnetic plate. The voltage output E_H of the transducer is proportional to the field strength B in the gap

which is a function of the position of the plate from the structure i.e. the displacement. We can measure the displacement upto 0.025 mm.

Q.1(b) (ii) Give comparison between active and passive transducers with two examples of each. [4]

(A)

	Active Transducer	Passive Transducer
1)	Works on energy conversion principle.	Works on energy controlling principle.
2)	No external supply is required.	External supply is required.
3)	Energy required is obtained from the measurand itself.	Energy required is derived from the external supply.
4)	Example : Thermocouple, photovoltaic cell etc.	Example : Thermistor, strain gauge, resistive, inductive, capacitive transducer.

Q.1(b) (iii) Explain the principle of operation, construction and one application of photoelectric transducers. [4]

(A) Principle

When optical radiations, X-rays & certain corpuscular radiations fall on a semiconductor, movable charges are produced which may cause one of the following effects depending upon the transducer used :

(i) Change in resistance, ΔR,

(ii) Change in current output, ΔI

(iii) Change in Voltage output, ΔV

[1 mark]

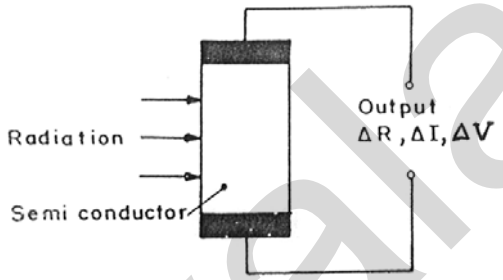

Fig.1 : Schematic diagram of photoelectric transducer

[1 mark]

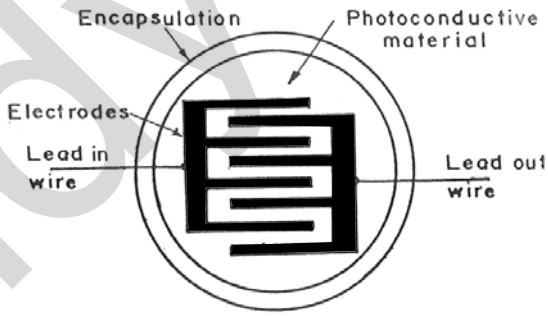

Fig. 2 : Photoconductive cell, photo resistor or LDR

Photoconductive cells or photo resistors or LDR : [2 marks]

In this, the light energy falling on the semiconductors like Cds, CdSe, PbS & PbSe etc. release free charge carriers which increase current produced by an applied voltage.

Thus, the increase of current with increase in incident light intensity with the applied voltage remaining constant

The resistance of the semiconductors decreases the increase in the light intensity & hence the name

Fig. 2 above represent construction of an LDR.

Application : Digital counters.

Q.2 Attempt any FOUR of the following: [16]

Q.2(a) Explain the principle and operation of the eddy current transducers for measuring displacement. [4]

(A) Principle [Figure - 1 mark, Explanation - 3 marks]

If a conducting plate is placed near a coil carrying A.C. then eddy currents are induced in the conducting plate which acts as a short circuited secondary winding of a transformer. these eddy currents produce their own magnetic field which opposes the magnetic field due to the coil. This results in the reduction of the flux & therefore the inductance of the coil is reduced $\left(\because L = \frac{N\phi}{I}\right)$.

The nearer is the plate to the coil the higher are the eddy currents & thus higher is the reduction in L of the coil.

L alters with variation of distance between the plate & the coil. The change in L is a measure of displacement.

Construction

It is as shown in Fig. below :

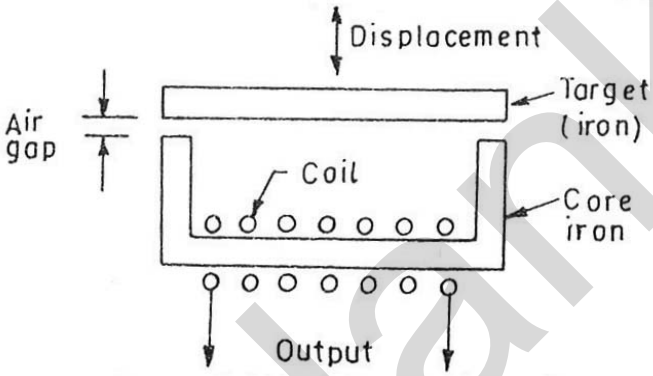

Fig. 1 : Variable reluctance inductive transducer.

Application

For measuring displacement as explained above.

Q.2(b) Define encoder and explain the principle, construction and state any two applications of Incremental Encoder. [4]

(A) Digital transducers are called Encoders. They are normally available in the form of linear or rotary displacement transducers :

(a) A/D converters are known as digital encoders or linear digitisers, while

(b) Rotary applications employ *shaft encoders or shaft digitisers*. They are used for measurement of the angular positions. [1 mark]

There are two types of optical encoders which are explained in brief as follows :

Incremental Encoders

Principle [1 mark]

It provides a pulse each time the shaft rotates through a predetermined angle, and creates a series of equally spaced signals corresponding to the mechanical increment required. It uses at least two signal generating elements.

The simpler type of incremental encoder is the tachometer encoder which is also called a single track incremental encoder because it has only one output & cannot detect direction. The output is usually a square wave.

Construction [1 mark]

It uses a glass disc with photographic opaque pattern & a lamp. Light can pass only through the transparent protion of the glass as the shaft rotates. It is detected by the photodetectors and the output is given in the binary form. Fig.1 below represents an incremental encoder.

[1 mark]

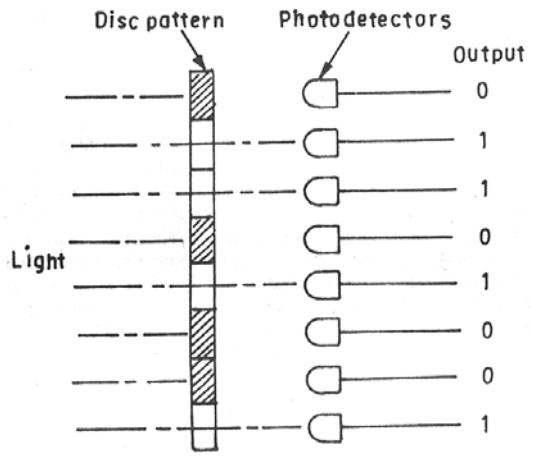

Fig.1 : An 8 bit incremental optical shaft encoder.

Q.2(c) Explain the capacitive transducers working on the principle of change of capacitance with change of area for measuring angular displacement. **[4]**

(A) Principle : [2 marks]

We know that the capacitance of a two-parallel plate capacitor is given by

$$C = \frac{\in_0 \in_r A}{d}$$

Where,

$\in_0$ = permittivity of free space = 8.854×10^{-12} F/m,

$\in_r$ = relative permittivity of the dielectric between the two plates,

A = over lapping area of the two plates,

d = distance between the two plates

If $\in_r$ and d are kept constant $C \propto A$

[2 marks]

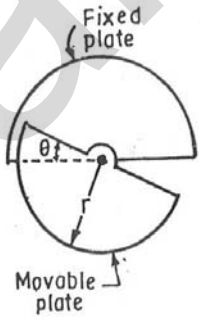

Fig. 1 : Capacitive transducer for measurement of angular displacement.

As θ varies; A varies and ∴ C also varies.

Q.2(d) Explain in brief the construction of Pyroelectric sensor. **[4]**

(A) Construction / Working : [1 mark]

A pyroelectric sensor consists of a polarized pyroelectric crystal with thin metal film electrodes on opposite faces. As the crystal is polarized with charged surfaces, ions are drawn from the surrounding air & electrons from any measurement circuit connected to the sensor to balance the surface charge. If infrared radiation is incident on the crystal, the polarization in the crystal is reduced as explained above & consequently the charge at the surfaces is reduced. There is then excess of charge on the metal electrode which leaks away through the measurement circuit until the charge on the crystal once again is balanced by the charge on the electrodes.

The pyroelectric sensor thus behaves as a charge generator which generates charge when there is a change in its temperature due to the incidence of infrared radiation.
Fig.1 below represents the equivalent circuit while Fig.2 represents the schematic diagram of a dual pyroelectric sensor, using a JFET voltage follower circuit.

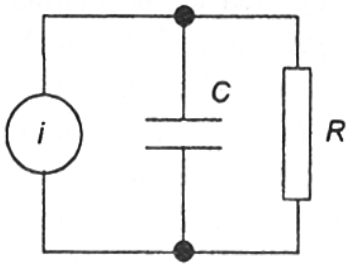

Fig. 1 : Equivalent circuit

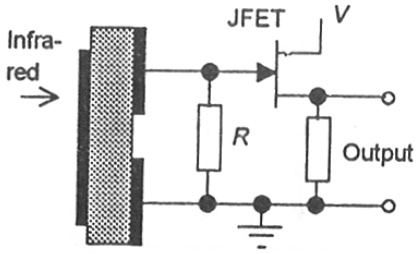

Fig. 2 : Dual pyroelectric sensor

[2 marks]

When a heat source moves such that the heat radiation moves from one sensing element to the other, then the resulting current through the resistor R alternates. Parabolic mirrors are used to direct the radiation onto the sensor.

[Explanation - 1 mark]

Q.2(e) Explain the working of an A.C. tacho generator alongwith its principle and one application. **[4]**

(A) A. C. Tachogenerators

Principle : [2 marks]

Whenever a stationary coil is linked with a rotating magnetic field, a statically induced emf is generated in that coil which can be expressed as $e = N_1 \frac{d\phi}{dt}$ in magnitude.

Where, N_1 = no. of conductors in the coil = $2T_1$ & T_1 = no. of coil turns.

Construction : [2 marks]

It has either a rotating permanent magnet or electromagnet while the coil is placed in the stator.

The rotation of the magnet causes an induced e.m.f. in the stator coil.

The amplitude and frequency of this emf are both proportional to the speed of rotation.

Either amplitude or frequency of the induced emf may be used as a measure of the rotational speed.

Here also the armature shaft is directly coupled to the shaft of the rotary machine whose speed is to be measured.

Q.2(f) Explain the principle of operation, construction and application of Electromagnetic velocity Transducers. **[4]**

(A) Moving magnet type electromagnetic velocity transducer is explained below :

Principle : [1 mark]

For a coil placed perpendicularly in a moving magnetic field, an emf is generated in the coil which can be expressed as $e = 2T_1B\ell v$

Where, T_1 = no. of coil turns
B = flux density of the magnetic field,
A = area of the coil,
N = no. of conductors of the coil = $2T_1$
v = relative velocity of the magnetic field w.r.t. the coil.

If the factors B, A & N are kept constant, then e ∝ v. The polarity of e determines the direction of motion.

Construction :

It is as shown in the following fig.: [Figure - 2 marks]

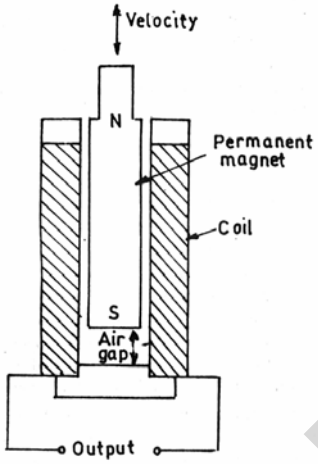

Fig. : Moving Magnet type Velocity Transducer

The sensing element is a rod which is a permanent magnet. It is rigidly coupled to the object whose velocity is to be measured.

There is a concentric coil surrounding the permanent magnet.

Application :

For measuring the linear velocity of an object.

[Explanation - 1 mark]

Q.3 Attempt any FOUR of the following: [16]

Q.3(a) Explain torque measurement using strain gauge with the help of a neat labelled diagram. [4]

(A) Principle of it is explained by the following : [2 marks]

Fig. : Two strain gauges are mounted on a shaft at an angle 45° to each other. The torque is given by :

$$T = \frac{\pi G\left(R^4 - r^4\right)}{2L}\theta$$

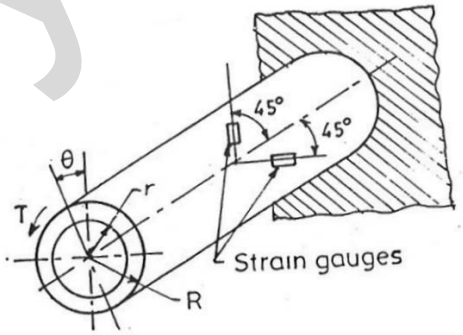

Fig. : Measurement of stress in a hollow shaft.

G = modulus of rigidity; N/m^2,
R = outer radius of shaft; m,
r = inner radius of shaft; m,
L = length of shaft; m,
θ = angular deflection of shaft; rad.

Construction : [2 marks]

The strain gauges attached at 45° degrees to the axis of the shaft as shown will indicate strains of

$$\varepsilon_{45} = \pm \frac{TR}{\pi G\left(R^4 - r^4\right)}$$

A strain may be measured by electrical means to indicate the torque. Multiple strain gauges may be installed and connected in a bridge circuit configuration so that any deformation due to axial or transverse loads is cancelled out in the final readout.

The strain in the shaft may be measured by means of strain gauges attached to its surface. The gauges should be so mounted that they give maximum sensitivity to the strains produced by torsion.

Q.3(b) State the needs of following signal conditioners : [4]
(i) Isolator (ii) Filter (iii) Amplifier and (iv) Data converter.

(A) (i) Isolator [1 mark]

It is needed when the peripheral operates at a different voltage or current. Thus isolator provides isolation and current or voltage amplification.

(ii) Filter [1 mark]

It is needed :

- To remove a certain band of frequencies from a signal & permitting others to be transmitted.
- To remove undesired a.c. components from the rectifier output circuit.
- To reduce the noise from a signal.

(iii) Amplifier [1 mark]

It is needed to increase the amplitude of the signal so that the output device can work properly.

(iv) Data Converter [1 mark]

The input signal may be either analogue or digital. It must match to the output device. Hence the function of the data converter is to bring the signal into the required form i.e. from analogue to digital or from digital to analog form.

Q.3(c) Describe the principle of working and construction of a piezo-electric type accelerometer. [4]

(A) Principle : [1 mark]

When a force F is applied to a piezo-electric crystal it develops a charge Q = dF coulomb where d = charge sensitivity of crystal C/N.

By applying a varying acceleration to the mass-crystal assembly, the crystal experiences a varying force. The force is given by

$$F = m \times a$$

where a = acceleration.

This force generates a varying charge : Q = dF = dMa.

Suppose the crystal has a capacitance, C, the no load output voltage is,

$$e_0 = \frac{Q}{C} = \frac{dF}{C} = d\frac{Ma}{C}$$

Therefore the output voltage is a measure of the acceleration.

Construction : [1 mark]

A piezo-electric accelerometer is shown in Fig.. The piezo-electric crystal is spring loaded with seismic mass in contact with the crystal. When subjected to an acceleration, the seismic mass stresses the crystal to a force F – Ma, resulting in a voltage generated across the crystal. The force generates an output voltage which is proportional to the acceleration.

[2 marks]

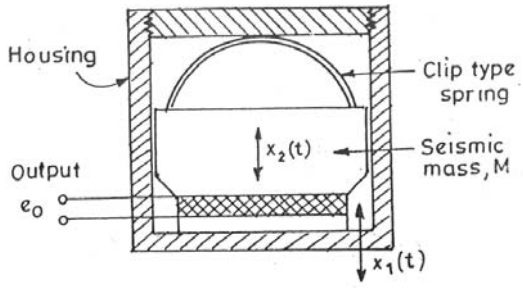

Fig. : Piezo-electric type accelerometer.

Q.3(d) Explain the principle of a basic PID controller with a neat block diagram. [4]

(A) Proportional-Plus-Integral-Plus-Derivative Controller

Basic : Proportional-Plus-Integral-Plus-Derivative Controller is popularly known as PID controller. This is a method where the reachability can be addressed effectively and efficiently.

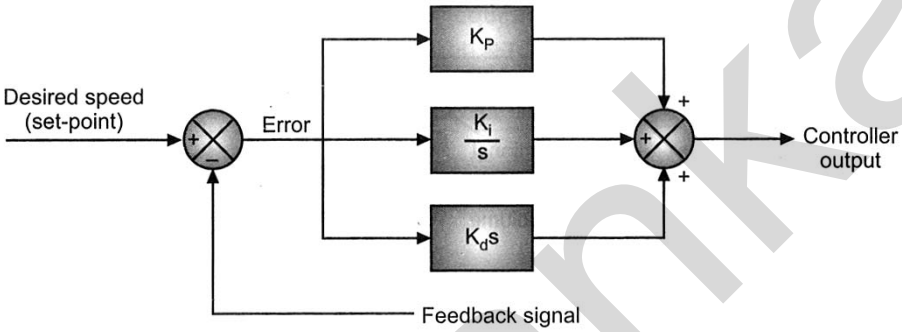

Fig.

The transfer function of the PID controller is,

$$G_{PID}(s) = \frac{C_y(s)}{E(s)}$$

$$= K_p + \frac{K_i}{s} + K_d s$$

where, K_p, K_i and K_d are called proportional, integral and derivative gains of the controller, respectively. These gains are also called PID parameters. Figure illustrates the block diagram of a PID controller.

[Explanation and Diagram – 2 marks each]

Q.3(e) Draw neat and labelled constructional diagrams of (i) LVDT accelerometer and (ii) strain gauge accelerometer. [4]

(A) Constructional diagrams of : [2 marks each]

(i) LVDT accelerometer and **(ii) Strain gauge accelerometer**

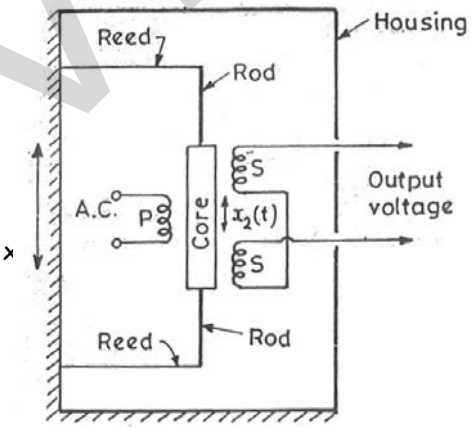

Fig. : Seismic accelerometer using LVDT.

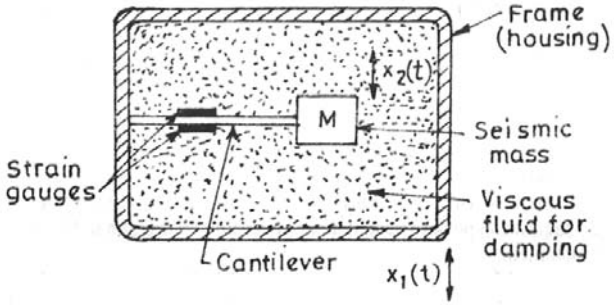

Fig. : Strain gauge Accelerometer.

Q.3(f) Draw a labelled block diagram of electronic controller. Explain the functions of (i) control section and (ii) Reverse direct action. **[4]**

(A) The electronic system has five basic parts as shown :

(i) Input section [1 mark]

This section generates the set point signal and compares it with the process signal (measurement) so as to produce deviation signal. The set point can be generates within the controller or external remote set point can be used.

[2 marks]

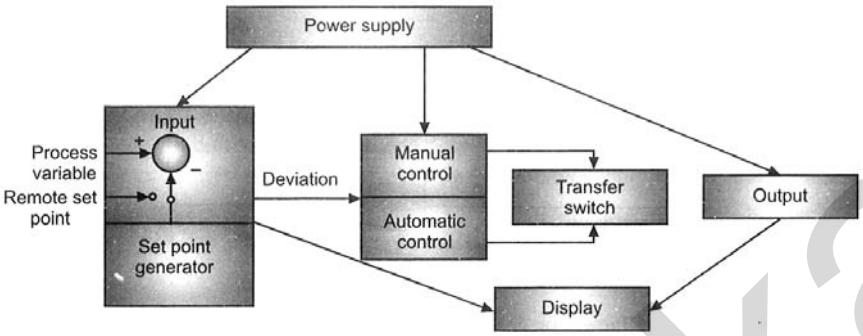

Fig.

(ii) Control section [1 mark]

The control section is generally a.c. amplifier which processes the deviation signal by amplification, differentiation or integration so as to generate the correction signal that brings about the necessary correction so as to maintain the measurement at the set point.

Q.4 Attempt any FOUR of the following: **[16]**

Q.4(a) Explain electronic derivative controller using op-amps. Also state its advantages. **[4]**

(A) [Diagram - 2 marks]

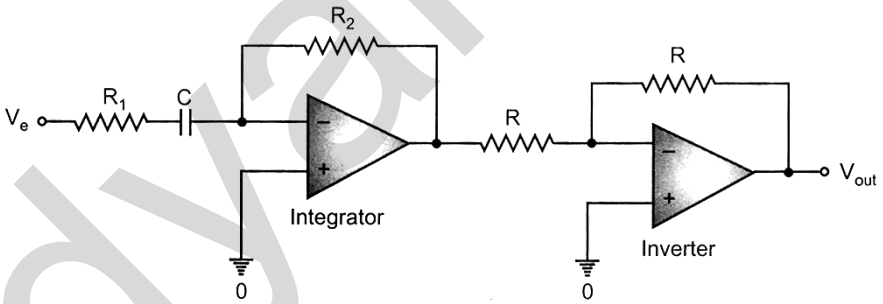

Fig.

[Explanation – 1 mark]

- The derivative controller action can be obtained by op-amp with capacitor and resistor at the input as shown.
- The output differential equation is given as

$$V_{out} + R_1C\frac{dV_{out}}{dt} = R_2C\frac{dV_e}{dt}$$

- Taking the laplace transform

$$\frac{V_o(s)}{V_c(s)} = \frac{R_2C_s}{1+R_1C_s}$$

Advantages [1 mark]

(i) Provides large corrective action before large error occurs.

(ii) Fast response, good stability.

Q.4(b) Draw a neat and labelled block diagram of a CNC based drilling machine **[4]**

(A) [4 marks]

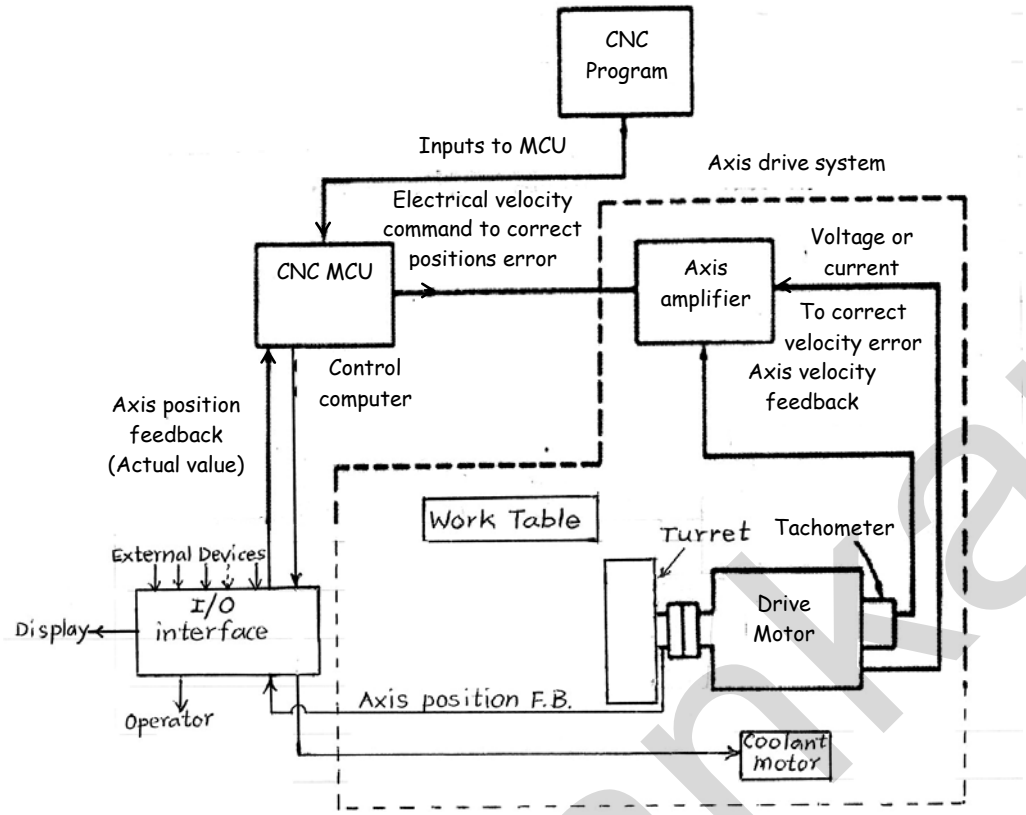

Fig. : CNC based Drilling of Machine

Q.4(c) Draw only the neat and labelled block diagram of fuzzy logic control used in fully automatic washing machine. **[4]**

(A) Figure below represents the block diagram of Fuzzy Logic control used in a fully automating washing machine :

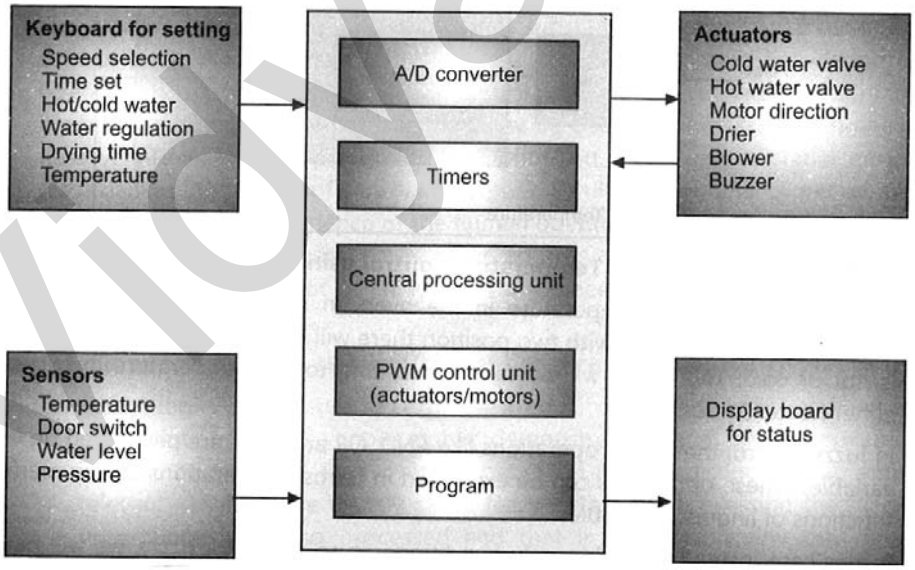

Fig.

Q.4(d) Draw only a neat labelled block diagram for stepper motor control using a microcontroller. **[4]**

(A)

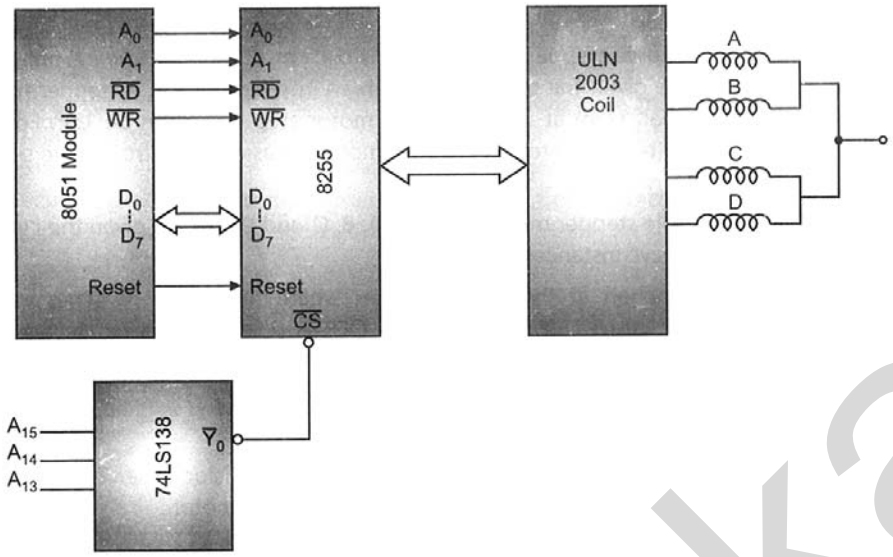

Fig.

Q.4(e) Draw a neat and labelled block diagram of a microcontroller / PLC based pick and place robot. Also show its three movements with the help of a sketch of a pneumatic cylinder. **[4]**

(A) [2 marks each]

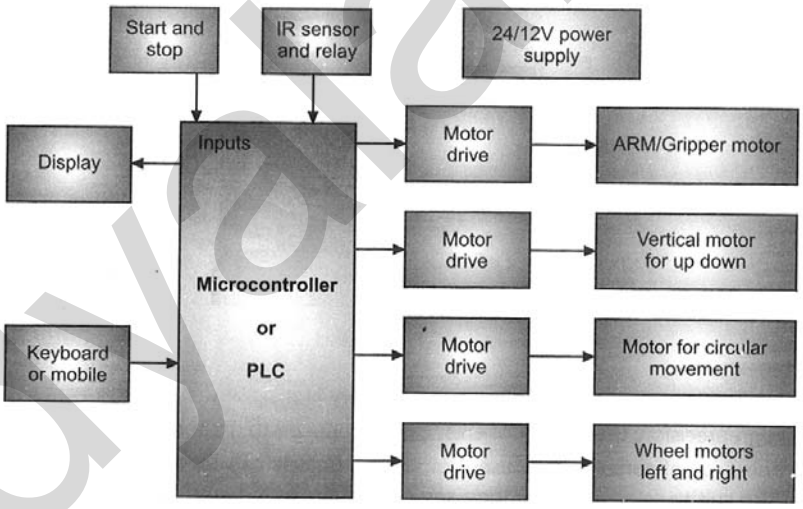

Fig. 1

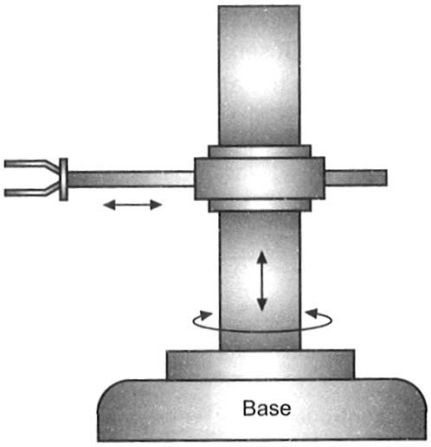

Fig. 2

Q.4(f) Explain briefly the principle of an electric relay with the help of a neat diagram. [4]

(A) [Diagram - 2 marks]

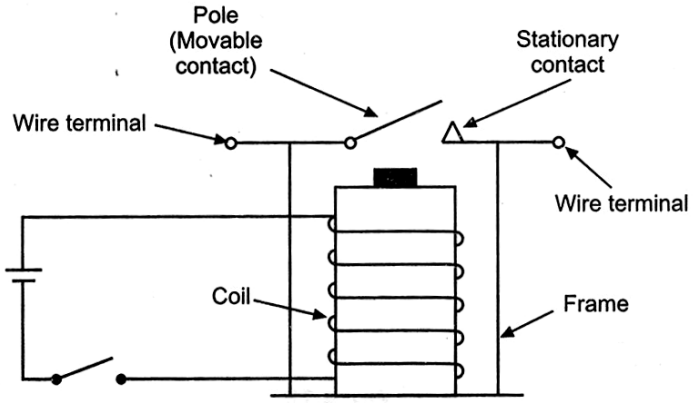

Fig. : Construction of a relay

Principle: [2 marks]

- When the relay is energized, a magnetic field is created around the coil. Therefore, the magnetic field attracts the movable contact. Owing to attraction, the contact moves to close the circuit between the movable arm and the fixed contact. When the current supply is stopped, the spring causes the movable contact to its original position and thus opens the circuit with the fixed contact.

Q.5 Attempt any TWO of the following: [16]

Q.5(a) Explain the principle of Double acting cylindrical actuator with a neat labelled diagram. [8]

(A) Double Acting Cylinder [Explanation - 4 marks, Figure - 4 marks]

- The main parts of a hydraulic double acting cylinder are shown in figure.
- The piston rod is connected to piston head and the other end extends out of the cylinder.
- The piston divides the cylinder into two chambers namely the rod end side and piston end side.
- The seals prevent the leakage of oil between these two chambers.
- The pressurized oil, air enters the cylinder chamber through the ports provided.
- It pushes the piston in the outward direction and the oil in the cylinder is drained out to the reservoir.
- This is called as forward stroke of the piston.
- The return stroke takes air by pressurizing the fluid from the rod end into the cylinder.

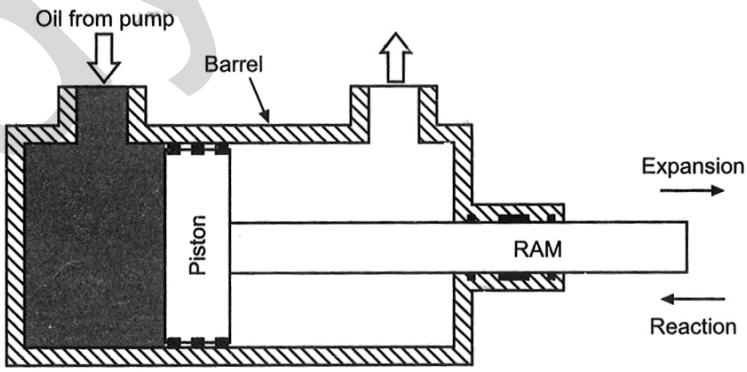

Fig. : Double acting cylinder

Q.5(b) With the help of a neat and labelled ladder diagram, explain the application of PLC for controlling process tank and conveyor motor. [8]

(A) A process tank shown in Fig. 1 is sequenced to mix the liquid fertilizer according to the following sequence of operations.

1. A start pushbutton is pressed to start the operation and the water valve "V_1" is being operated to open in order to fill the tank up to a preset level sensed by a level switch "A".

2. As the tank fills, a level switch "A" closes the NO contact to energize the stirrer motor to start automatically and operate it for 5 seconds to mix the fluid.
3. When the stirrer motor stops, the solenoid operated water valve "V_2" is energized to empty the tank.
4. When the tank is completely empty the level switch "B" opens and de-energizes the solenoid operated valve "V_2".
5. A stop button is pressed to stop the operation.

[2 marks]

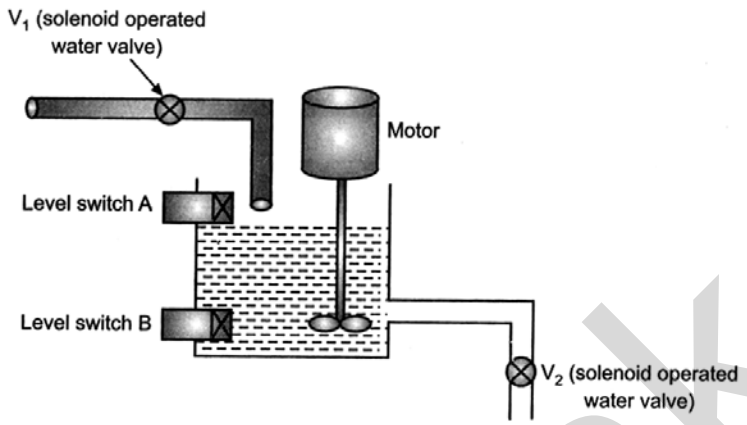

[2 marks]

Fig. 1

Table 1: Instruction list with I/O devices [1 mark]

Input devices		Output devices	
X100	Start pushbutton	Y100	Water valve V1
X200	Stop switch	Y200	Motor
X300	Level switch A	Y300	Water valve V2
X400	Level switch B		

[2 marks]

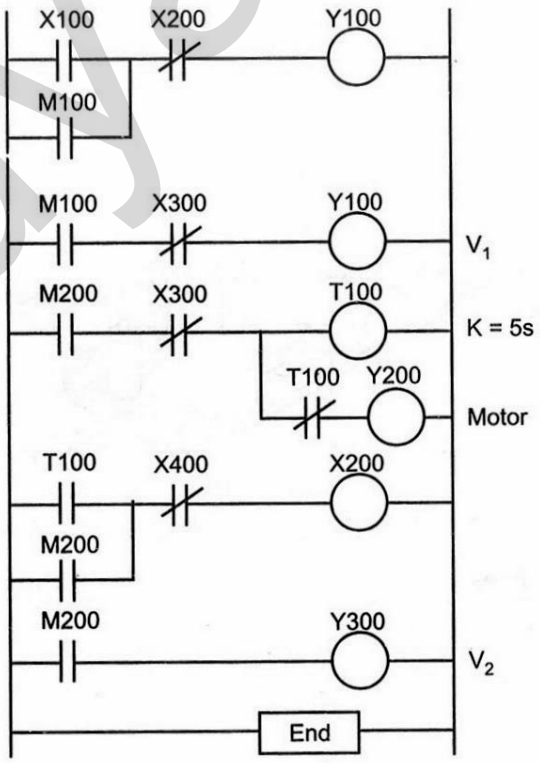

Fig. 2 : The ladder diagram to achieve the operation of process tank

Pressing start button X100 latches the circuit of internal relay M100 and the circuit for the solenoid-operated inlet valve V_1 will be closed if the level switch A is turned OFF through an NC contact to start filling the tank. The water inlet valve V_1 will be stopped as soon as the level switch "A" is actuated the NC contact. As the water is filled, an NO contact of level switch "A" is energized which in turn is connected to operate both timer coil and a motor device. The motor output is switched OFF after 5 seconds automatically through an NC timer contact. The timer contact is latched with an internal relay contact M200 having an NC contact of level switch B for emptying the tank through water valve V_2. The operation can be stopped with a pushbutton X200.

[1 mark]

Q.5(c) Explain briefly the construction and working of a jet type hydraulic proportional controller. [8]
State its advantages, disadvantages and applications.

(A) [3 marks]

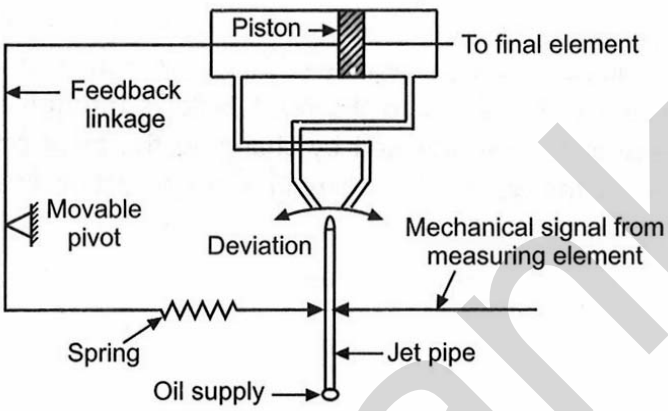

Fig.

Working : [2 marks]

When the jet pipe is moved towards right by the deviation signal, the piston moves to the right along with the feedback linkage whose motion acts to bring the jet pipe back to its neutral position. Thus for every unit of deviation, there is some fixed piston position that actuates the final element to certain opening that brings about the necessary correction in the measurement which is nothing but P action control. PB adjustment can be done by changing the position of movable pivot that regulates the amount of piston motion required to restore the jet pipe to neutral position.

Advantages : [1 mark]

(i) High speed of response.
(ii) Easy maintenance.

Disadvantages : [1 mark]

(i) Hydraulic fluids require maintenance to remove any impurities, corrosive effects etc.
(ii) Seals should be maintained to avoid leakages.

Applications : [1 mark]

(i) Hydraulic controllers are used with actuators, valves, pumps for transmission of liquids.

Q.6 Attempt any TWO of the following: [16]

Q.6(a) Draw labelled block diagram of microcontroller based antilock brake system and explain its working. [8]

(A) [Figure - 4 marks and Explanation - 4 marks]

(i) Shown below in Fig.1 is the block diagram of Microcontroller based Antilock Brake System.

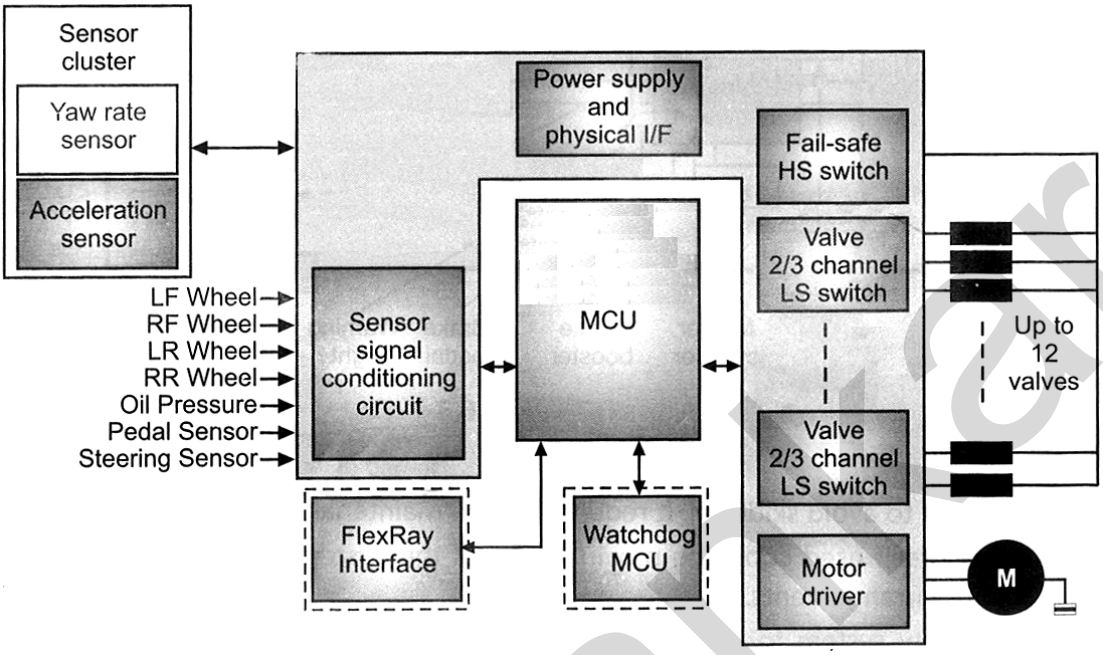

Fig. 1

(ii) The purpose of ABS is to control vehicle braking when the driver presses the brake pedal. By preventing the brakes from locking the wheels, the driver is able to maintain control. By keeping brake pressure just below the point of causing a wheel to lock up, ABS ensures that maximum braking power is used. In order to do this the ABS must be able to monitor individual wheel speed, compare these speeds with each other, be able to control the braking for each wheel and relay this information to other electronic systems within the vehicle.

There are three basic parts of an ABS whose functions are explained briefly as follows :

(1) Wheel Speed Sensors

They generate an analog signal whose frequency is proportional to the angular speed of the wheel.

There are two types of sensors viz.

(a) Yaw sensor & (b) Roll sensor i.e., linear acceleration rate senor.

(2) Microcontroller

- It converts the analog signals into a digital signal, records the time in between falling or rising edges and calculates the actual wheel speed. It then determines if the wheel speed is increasing or decreasing by comparing this new data to past history data held in memory. It also must compare this to the speeds of the other wheels to determine if one or more of the wheels has begun to lock up. If this occurs, the program in the controller must send a signal to the valve for that wheel to reduce the hydraulic pressure to the brakes. By continuing to reduce this pressure until the wheel grips the road, driver control is re-established and overall braking power is increased. The microcontroller determines when to stop decreasing the pressure when the wheel speed has matched the remaining wheels.
- It sends the following four possible outputs :
  (i) Off - the vehicle is not braking.
  (ii) Hold - the vehicle is braking but none of the wheels have locked.

(iii) Increase - the wheels is moving faster than other non locked wheels.
(iv) Decrease - the wheel is locked.

- It executes every possible sequence of its code including IO commands within a timeframe the vehicle manufacturer determines it necessary for the ABS to perform its function.
- The microcontroller clock must be fast enough and it must have enough system memory to execute the code, send and receive I/O and communicate with other systems in the specified time. Otherwise the system fails.

(3) Hydraulic Modulator

It prevents wheel lock-up by modulating the braking pressure, automatically. It does so by monitoring the individual wheel speed as explained above.

Q.6(b) Explain the principle and construction of MEMS accelerometer. **[8]**

(A) Let us consider MEMS accelerometer based on say capacitance principle.

Principle :

We know that $C = \frac{\in_0 \in_r A}{d}$ with usual notations. If $\in_r$ and A are kept constant, then $C \alpha \frac{1}{d}$

$\Rightarrow$ as d decreases, C increases while as d increases, C decreases.

Construction :

- The sense element wing is a flat plate of nickel supported above the substrate surface by two torsion bars attached to a central pedestal. The structure is asymmetrically shaped so that one side is heavier than the other, resulting in a center of mass that is offset from the axis of the torsion bars. When an acceleration force produces a moment around the torsion bar axis, the plate or wing is free to rotate, constrained only by the spring constant of the torsion bars.
- On the substrate surface, beneath the sense element wing, two conductive capacitor plates are symmetrically located on each side of the torsion bar axis. The upper wing and the two lower capacitor plates on the substrate form two air-gap variable capacitors with a common connection. This creates a fully active capacitance bridge. When the wing rotates about the torsion bar axis, the average distance between the wing and one surface plate decreases, increasing the capacitance for that plate, while the distance to the other plate increases, decreasing its capacitance.

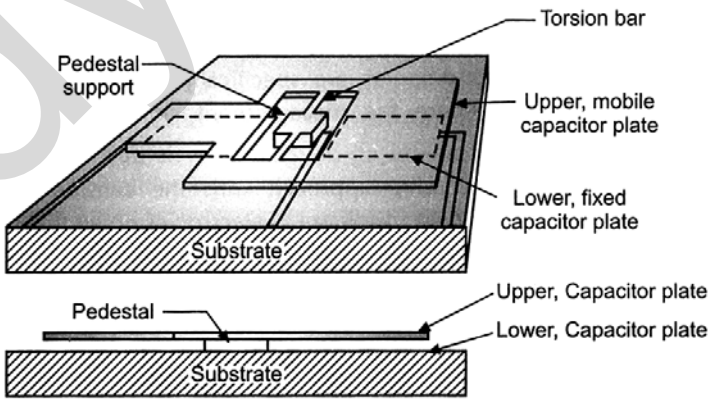

Fig. : Construction

[Figure - 5 marks, Explanation - 3 marks]

Q.6(c) With the help of neat diagrams, explain the operation of an automatic car park barrier system briefly. **[8]**

(A) **(I) Construction or Scheme** [Figure 1 & 2 – 2 marks each, Explanation - 4 marks]

PLC based automatic car park barrier system consists of the following main components viz. barriers, electric actuators (solenoid valves and limit switches), hydraulic actuator (single acting cylinder) and a PLC.

These are explained briefly as follows :

(1) Barriers :

These are of two types viz.

(a) IN barrier (Fig.1) :

It is located at the entry of the car park and is used to allow the car in by opening when the correct money (coilns) is inserted in the cash box.

It is pivoted at one end & is controlled with two solenoid valves 'A' and 'B' which are associated with a cylinder–piston assembly. A connecting rod connects the piston and barrier as shown.

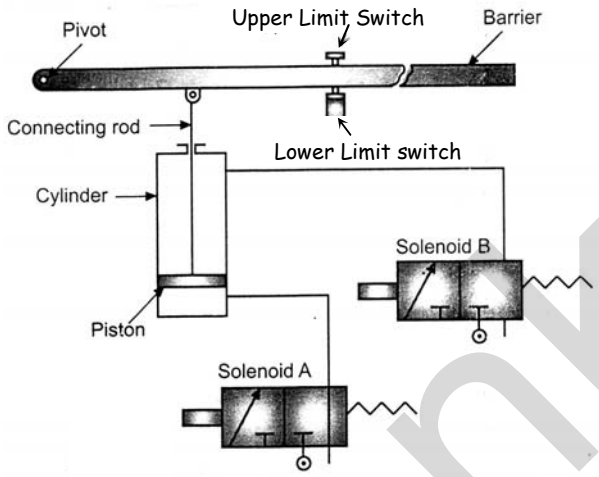

Fig.

(b) OUT barrier :

It is located at the exit of the car park & is opened to let the car go when the car is detected in front of it.

It has similar arrangements of solenoids & limit switches, as that of the IN barrier.

(2) Solenoids :

There are two solenoid valves 'A' & 'B' as mentioned above, which are used to move the piston upwards for opening & downwards for closing of the barrier.

(3) Limit Switches :

There are two limit switches : one is placed at the top edge & the other is placed at the bottom edge of the barrier, to detect the position of the IN barrier (& similarly that of the OUT barrier).

(4) PLC (Fig.2) :

The details of the connections are as shown.

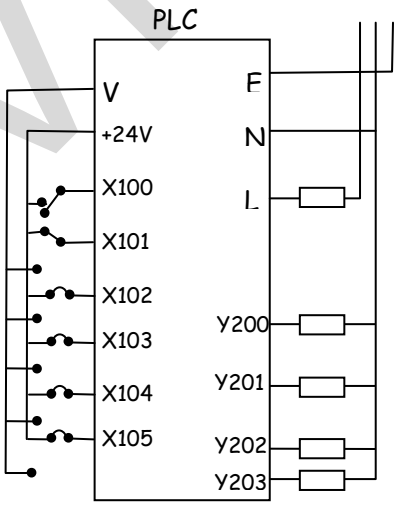

X100 – Coin operated switch at the entrance of the car park

X101 – Switch activated when entrance barrier up

X102 – Switch activated when entrance barrier down

X103 – Switch activated when car at exit barrier

X104 – Switch activated when car at exit barrier up

Fig.2

(II) Operation :

It is as per the following sequence :

1. The car enters the car park.
2. The driver inserts the coin in the cash box.
3. The 'IN' barrier opens & lets the car enter the park
4. The 'IN' barrier closed subsequently.
5. The driver parks the car & leaves the park for his work.
6. After driver's work is over, he returns to the car.
7. He drives the car to the front of the 'OUT' barrier.
8. The 'OUT' barrier opens & lets the car to leave the park.
9. The 'OUT' barrier closes subsequently.
10. The cycle then repeats for the next car.

❑ ❑ ❑ ❑ ❑